GFORCE ARMS™

9-IRON

9mm SEMI-AUTO PISTOL

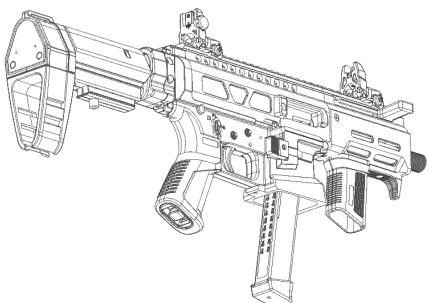

OWNER'S MANUAL

READ THE INSTRUCTIONS AND WARNINGS IN THIS MANUAL CAREFULLY BEFORE USING THIS FIREARM

WARNING:
This product can expose you to chemicals including lead, which is known to the State of California to cause cancer and birth defects or other reproductive harm. Discharging firearms, handling ammunition, and cleaning firearms can also expose you to lead. Use in well-ventilated areas and wash hands after handling. For more information go to www.P65Warnings.ca.gov.

SAFETY GLASSES AND HEARING PROTECTION MUST ALWAYS BE WORN WHILE DISASSEMBLING, REASSEMBLING, AND FIRING THE FIREARM. GUN PARTS AND DUST CAN CAUSE INJURY TO YOUR EYES. LOUD NOISES MAY DAMAGE YOUR HEARING.

General Rules

- Read and understand all of the technical details and safety rules in this manual before using, handling, or transporting your firearm.
- Treat every gun as loaded until you have checked it yourself.
- Always keep your finger off the trigger and outside the trigger guard until you are ready to shoot.
- Never point your gun at anything you do not intend to shoot.
- Always be sure of your target and what is behind it. A bullet can travel more than 2,000 meters (more than 1 mile).
- Never shoot at a hard surface such as rock, or at water.
- Always wear eye and ear protection.
- Keep your fingers and hands away from the ejection port. The bolt moves forward with great force and can crush your fingers.

- Use only non-defective, factory-made ammunition of the correct caliber that meets SAAMI or CIP standards.
- If the gun does not fire, keep it pointed in a safe direction, wait 30 seconds, then clear the chamber.
- Altering or converting the firearm's original function or mechanical configuration may cause legal or mechanical problems.
- Store the firearm unloaded and locked, and keep ammunition in a separate container, out of reach of children and unauthorized persons.
- Never leave your firearm unattended.
- Never use your firearm under the influence of alcohol, drugs, or any substance that may impair your judgment or physical ability.
- Know and obey all federal, state, and local laws about owning, storing, carrying, transporting, and modifying firearms and magazines. Laws are different in each state. The owner is responsible for following the law.

IMPORTANT WARNINGS:

• Get proper training from a competent firearms instructor before shooting, handling, or transporting your firearm.

• Failure to follow the rules of firearm safety can result in serious injury, destruction of property, or death.

• Without proper care and training, the firearm may be discharged unintentionally, accidentally, or negligently.

• Always clear the chamber immediately after shooting. Ignoring malfunctions may cause damage to your firearm and injury to you.

• This firearm and its magazines may not be legal to purchase or possess in some states and localities. Check your state and local laws before purchase.

Safe Storage and Child Safety

> ⚠ **WARNING:**
> Children are attracted to firearms and can operate them. Firearms left unattended or unsecured can cause serious injury or death. Always store your firearm unloaded and locked, out of sight and reach of children and unauthorized persons, with ammunition stored separately. Many states have laws that hold firearm owners responsible if a child or prohibited person gets access to an unsecured firearm.

A cable lock is included with your 9-IRON. Use it every time the firearm is stored. The lock is a safety device only. It is not a replacement for safe storage in a locked safe or container.

Installing the Cable Lock

1. Unload the firearm (see "Unloading the Firearm"). Remove the magazine and make sure the chamber is empty.
2. Pull the charging handle to the rear and push it up into the notch to lock the bolt open.
3. Push the cable through the ejection port and out through the magazine well. Keep your fingers out of the ejection port.
4. Insert the end of the cable into the lock and close it until it clicks. Pull on the cable to make sure it is locked.
5. Keep the key in a secure place, away from the firearm and away from children.

To remove the lock, unlock it with the key, pull the cable out, release the bolt, and confirm again that the chamber is empty.

9-IRON — Specifications (Base Model)

Model	9-IRON
Manufacturer	Manufactured in Turkey by Defenceport
Importer	Imported by GForce Arms, Reno, NV
Type	Semi-automatic pistol
Caliber	9mm Luger (9x19mm)
Action	Straight blowback
Safety	Ambidextrous safety selector (SAFE / FIRE)
Magazine	Glock-pattern 9mm (capacity by model number)
Sights	Flip-up polymer sights (included in the box, not installed)
Rails	Top Picatinny rail (MIL-STD-1913), M-LOK handguard
Lower Receiver	Polymer
Upper Receiver	Billet aluminum, Type III hard anodized
Barrel	4140 steel, QPQ (nitride) finish
Barrel Length	6.125 in (156 mm)
Barrel Thread Pitch	1/2"-28
Rifling Twist	1 in 10 in
Overall Length	13.75 in (349 mm)
Overall Height	7.8 in (197 mm)
Overall Width	1.6 in (40 mm)
Weight (no magazine)	4.8 lb (2,176 g)

Barrel length, overall length, weight, and brace or stock configuration vary by model number. Operation is the same for all 9-IRON models.

Description of the Firearm

The 9-IRON is a lightweight, straight blowback, semi-automatic 9mm firearm for recreational shooting and home defense. It is offered in several configurations with different barrel lengths and braces or stocks. All 9-IRON models operate the same way, so this manual applies to all of them. It uses Glock-pattern 9mm magazines and has a top Picatinny rail and an M-LOK handguard, so you can add optics, lights, and other accessories to build your own setup.

> ⚠ **NOTE – PICTURES AND INCLUDED ITEMS:**
> The brace, stock, sights, accessories, and other items shown in the pictures in this manual may not be included with your model. Each model number (SKU) is different. Check your model number online at www.gforcearms.com to confirm what is included with your firearm, and be sure you understand what you purchased.

Serial Number

The serial number is located on the lower receiver and the upper receiver. The two numbers must match. Write it here and keep this manual in a safe place: **Serial Number:** _____

Side View

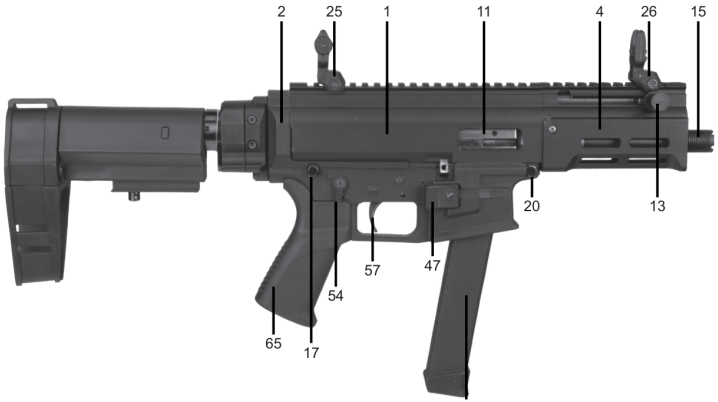

1 Upper Receiver	13 Charging Handle	25 Rear Sight	54 Safety Selector Lever (R)
2 Lower Receiver	15 Flash Hider	26 Front Sight	57 Trigger
4 Handguard	17 Pivot Pin	47 Magazine Release Button (R)	65 Pistol Grip
11 Bolt	20 Takedown Pin		68 Magazine

Ammunition

Use only clean, dry, factory-made 9mm Luger (9x19mm) ammunition that meets SAAMI or CIP standards. Check that the caliber marked on the cartridge case matches your firearm. Do not use reloaded, hand-loaded, or damaged ammunition (cracked, dented, or deformed cases, or damaged bullets).

> ⚠ Do NOT use +P or +P+ ammunition. Use of +P or +P+ ammunition may damage the firearm and cause serious injury or death, and will void the warranty.

Magazines

The 9-IRON uses Glock-pattern 9mm magazines. Compatible magazines:

- Factory Glock 9mm magazines
- GForce Arms Glock-pattern 9mm magazines

Use of other magazines is not recommended.

The 9-IRON ships with a magazine whose capacity depends on the model number and the laws of the state where it is sold. Check the magazine capacity laws in your state before you buy or use magazines.

Loading the Magazine

Hold the magazine upright. Place a cartridge on the follower with the bullet pointing forward and push it down and back under the magazine lips. Repeat for each cartridge. Do not load more cartridges than the magazine capacity.

Rails and Accessory Mounting

Top Picatinny Rail: The upper receiver has a full-length Picatinny rail (MIL-STD-1913) for mounting optics, sights, lasers, and lights.

M-LOK Slots: The handguard has M-LOK slots for mounting grips, lights, lasers, sling mounts, and other M-LOK compatible accessories.

Rear Adapter: Some 9-IRON models come with a pistol stabilizing brace or a stock. Not all models include a brace or stock.

> ⚠ **WARNING:**
> 9-IRON pistol models are pistols. Installing a shoulder stock on a pistol with a barrel shorter than 16 inches creates a short-barreled rifle (SBR) under the National Firearms Act. Do not install a stock on a pistol, and do not install a barrel shorter than 16 inches on a rifle, unless you have first completed all required federal registration with the ATF and the firearm is legal under your state and local laws. Laws on pistol braces also vary by state. The owner is solely responsible for complying with all federal, state, and local laws.

Using a Suppressor

The 9-IRON has a 1/2"-28 threaded barrel. To install a suppressor, unload the firearm, remove the thread protector, and install the suppressor according to the suppressor manufacturer's instructions.

- Only use a suppressor that is rated for 9mm semi-automatic firearms and for barrels 3 inches or longer.
- **The 9-IRON has a fixed barrel. Do not use a booster (piston / Nielsen device).** If your suppressor came with a booster, replace it with the **fixed spacer** (fixed barrel spacer) offered by the suppressor manufacturer.
- Before every use, make sure the suppressor is fully tightened and aligned with the bore.
- With a suppressor installed, felt recoil may increase, and you may feel more gas at the ejection port. This is normal for a blowback firearm. Clean the firearm more often when shooting suppressed.
- The suppressor gets very hot during firing. Do not touch it until it has cooled down.

> ⚠ **WARNING:**
> Using a suppressor with a booster on this fixed-barrel firearm, or using a suppressor not rated for 9mm semi-automatic firearms, can cause BAFFLE STRIKES, damage to the suppressor and firearm, and serious injury. Damage caused by a booster or an incorrect suppressor is not covered by the warranty.
> Suppressors are regulated under the National Firearms Act and by state law. Make sure your suppressor is legally registered and legal where you live and shoot.

Folding Brace / Stock Adapter

These instructions apply only to 9-IRON models that come equipped or packaged with a folding brace or stock adapter. Not all models include this component.



1. To fold the brace or stock, push the locking pin upward.



2. Fold the brace or stock to the left side of the firearm.

3. To unfold the brace or stock, rotate it back to its original position and make sure the adapter locks.

Loading the Firearm

ALWAYS POINT THE GUN IN A SAFE DIRECTION WHILE LOADING!

1. Put the safety selector on SAFE.
2. Insert a loaded magazine into the magazine well. Push it up until it locks. Pull down on the magazine to make sure it is locked.
3. Pull the charging handle fully to the rear and release it. Do not ride the charging handle forward. The bolt goes forward and loads a cartridge into the chamber.
4. The gun is now loaded. Keep the safety selector on SAFE until you are ready to shoot.

WARNING: KEEP FINGERS AWAY FROM THE EJECTION PORT

When you release the charging handle, the bolt slams forward with great force and CAN CRUSH OR CUT YOUR FINGERS. Never put your fingers in the ejection port or in front of the bolt.

Using the Safety Selector

The 9-IRON has an ambidextrous safety selector (left and right side). It has two positions:

- **SAFE** – The trigger is locked. The gun cannot fire.
- **FIRE** – The gun fires one shot each time you pull the trigger. Release the trigger and pull it again to fire the next shot.

Only move the safety selector to FIRE when the gun is pointed at the target and you are ready to shoot.

Unloading the Firearm

WARNING: KEEP FINGERS AWAY FROM THE EJECTION PORT

When you release the charging handle, the bolt slams forward with great force and CAN CRUSH OR CUT YOUR FINGERS. Never put your fingers in the ejection port or in front of the bolt.

POINT THE GUN IN A SAFE DIRECTION!

1. Put the safety selector on SAFE.
2. Press the magazine release button and remove the magazine.
3. Pull the charging handle fully to the rear. The cartridge in the chamber will come out.
4. Push the charging handle up into the notch to lock the bolt open.
5. Look into the chamber and the magazine well. Make sure there is no cartridge.
6. Keep your fingers away from the ejection port. Release the charging handle from the notch and let the bolt close.
7. With the gun pointed in a safe direction, put the safety on FIRE and pull the trigger to release the hammer.
8. Put the safety selector back on SAFE.

Installing and Adjusting the Sights

The flip-up front and rear sights come packed in the box and are not installed on the firearm. You may install them on the top Picatinny rail if you choose. Make sure the firearm is unloaded before installing or adjusting the sights. Install the rear sight toward the back of the rail and the front sight toward the muzzle.



1. Use a 3 mm Allen key to loosen or remove the retaining screw of the sight.



2. Place the sight on the top rail and move it to the position you need.



3. Install the retaining screw and tighten it with the 3 mm Allen key.

Field Stripping

> **IMPORTANT WARNING:**
> Remove all ammunition from the area. Remove the magazine and look into the chamber to make sure it is empty before you begin.

NOTE: All screws are installed with thread locker (Loctite). Heat the screws before loosening them to prevent damage. Use blue (medium strength) thread locker when you reassemble.



1. Press the magazine release button and remove the magazine.



2. Put the safety selector on SAFE.



3. Pull the charging handle to the rear. Make sure the chamber is empty.



4. Push out the takedown pin and the pivot pin.



5. Separate the upper and lower receivers.

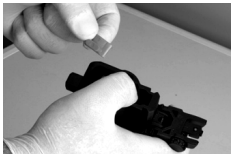

6. Push the rear buffer down and remove the rear buffer retainer.

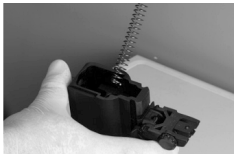

7. Remove the guide rod and recoil spring.



8. Remove the bolt.



9. Unscrew the handguard screws.



10. Remove the handguard.

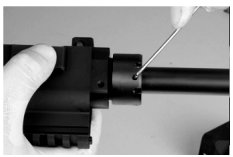

11. Loosen the barrel nut set screw...



...and unscrew the barrel nut.

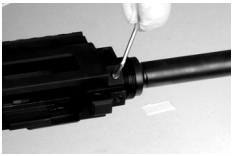

12. Unscrew the upper receiver set screw.

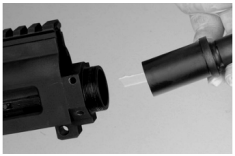

13. Remove the barrel.

Reassembly

To reassemble your firearm, follow the field stripping steps above in reverse order.

> ⚠ **FUNCTION CHECK:**
> After reassembly, do a function check. With the gun EMPTY and pointed in a safe direction: pull the charging handle fully to the rear and release it to cock the hammer. Put the safety on SAFE and pull the trigger (the hammer must NOT fall). Put the safety on FIRE and pull the trigger (the hammer must fall). If the gun does not pass this check, do not use it. Contact GForce Arms.

Cleaning the Firearm

Clean your firearm after every use, if it gets wet, and at least once a year if it is stored. Any malfunction should be checked by a competent gunsmith or GForce Arms customer service.

Barrel and Chamber

Push a clean patch on a cleaning rod through the barrel and chamber. If the barrel is very dirty, apply gun cleaning solvent with a bore brush and let it work for about 10 minutes. Push the brush all the way through the barrel before pulling it back. Then dry the barrel and chamber with clean patches until a patch comes out clean.

Other Parts

Clean the bolt, receivers, and other parts with a dry cloth, a nylon brush, or a soft scraper. Do not use barrel solvent on other parts; it can stay in the joints and cause corrosion. Make sure no cloth fibers or brush bristles stay inside the firearm.

Magazines

If a magazine is very dirty (dust, mud, or after long use), take it apart and wash the parts in soapy water. Let the parts dry completely in open air, then reassemble the magazine. No oil is needed.

Lubrication

Apply a light coat of gun oil to the outside of the bolt, the inside of the upper receiver where the bolt slides, the guide rod, the charging handle rod, and the hammer and trigger pivot points. Remove all excess oil. Before shooting, push a dry patch through the barrel. In very cold weather, use a lubricant made for low temperatures.

If the firearm is properly used and maintained, malfunctions will rarely occur. If one does, follow the instructions below.

> ⚠ **CAUTION:**
> When clearing a malfunction, the risk of accidental discharge is higher. Keep the firearm pointed in a safe direction and your finger off the trigger. Never place your hands in front of the muzzle.

Malfunction	Possible Cause	Remedy
Cartridge does not feed or the bolt does not close fully	Magazine not fully inserted or damaged. Firearm or ammunition is dirty.	Insert the magazine fully or change magazine. Clean the firearm and ammunition and lightly lubricate.
Misfire (the gun does not fire)	Defective cartridge. Firing pin channel is dirty, or the wrong lubricant was used in cold weather.	Wait 30 seconds with the gun pointed in a safe direction, then clear the chamber. Clean the firearm or have it checked by a gunsmith.
A shot sounds "weak"	The cartridge had little or no powder.	STOP. Unload the firearm and check that the bullet is not stuck in the barrel. Firing with a blocked barrel can cause injury and damage the firearm.
Spent case is not ejected	Chamber, extractor, or ammunition is dirty, or the wrong lubricant was used in cold weather.	Clean and lightly lubricate the firearm. Use clean, new factory ammunition.

If you cannot clear a malfunction as described above, have the firearm inspected and repaired by a competent gunsmith or contact GForce Arms.

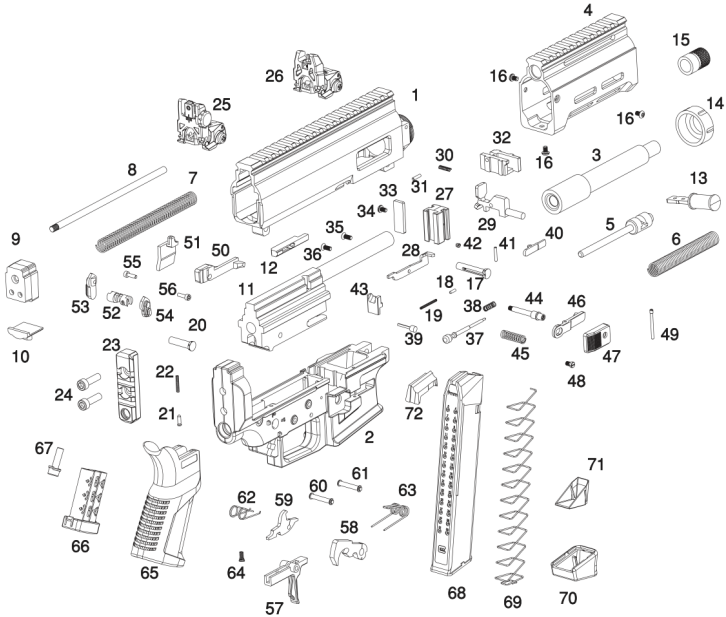
1
2
3
4
5
6
7
8
9
10
11
12
13
14
15
16
16
16
17
18
19
20
21
22
23
24
25
26
27
28
29
30
31
32
33
34
35
36
37
38
39
40
41
42
43
44
45
46
47
48
49
50
51
52
53
54
55
56
57
58
59
60
61
62
63
64
65
66
67
68
69
70
71
72

Parts List

1 Upper Receiver
2 Lower Receiver
3 Barrel
4 Handguard
5 Charging Handle Carrier
6 Charging Handle Spring
7 Recoil Spring
8 Guide Rod
9 Rear Buffer
10 Rear Buffer Retainer
11 Bolt
12 Ejector
13 Charging Handle
14 Barrel Nut
15 Flash Hider
16 Handguard Screws (3)
17 Pivot Pin
18 Pivot Pin Detent
19 Pivot Pin Spring
20 Takedown Pin
21 Takedown Pin Detent
22 Takedown Pin Spring
23 Picatinny Rail
24 Picatinny Rail Screws (2)
25 Rear Sight
26 Front Sight
27 Hammer Block
28 Bolt Catch
29 Bolt Catch Lever
30 Bolt Catch Spring
31 Bolt Catch Pin
32 Bolt Catch Housing
33 Hammer Block Plate
34 Bolt Catch Screw
35 Ejector Screw
36 Ejector Housing Screw
37 Firing Pin
38 Firing Pin Spring
39 Firing Pin Retainer
40 Extractor
41 Extractor Pin
42 Extractor Spring
43 Feed Ramp
44 Magazine Catch Pin
45 Magazine Catch Spring
46 Magazine Release Lever, Right
47 Magazine Release Button, Right
48 Magazine Release Button Screw, Left
49 Magazine Release Button Pin
50 Magazine Release Lever, Left
51 Magazine Release Button, Left
52 Safety Selector
53 Safety Selector Lever, Left
54 Safety Selector Lever, Right
55 Safety Selector Lever Screw, Left
56 Safety Selector Lever Screw, Right
57 Trigger
58 Hammer
59 Disconnector
60 Trigger Pin
61 Hammer Pin
62 Trigger Spring
63 Hammer Spring
64 Disconnector Spring
65 Pistol Grip
66 Grip Cap
67 Pistol Grip Washer and Screw
68 Magazine
69 Magazine Spring
70 Magazine Floor Plate
71 Magazine Floor Plate Insert
72 Magazine Follower

LIMITED LIFETIME WARRANTY

GForce Arms warrants this firearm to be free from defects in materials and workmanship for the lifetime of the firearm. If a factory defect is found, GForce Arms will repair or replace the firearm at no charge.

This warranty does not cover:

- Normal wear and tear
- Damage from misuse, abuse, neglect, or accidents
- Damage from modifications, aftermarket parts, or repairs not done by GForce Arms
- Damage from +P, +P+, reloaded, or hand-loaded ammunition
- Damage from using a suppressor with a booster, or a suppressor not rated for 9mm semi-automatic firearms
- Finish wear or cosmetic damage from use

CUSTOMER SERVICE

For warranty and service issues, visit **https://gforcearms.com/warranty** to register your firearm and contact our customer service team.

Email: info@gforcearms.com
Website: www.gforcearms.com



Manufactured in Turkey by Defenceport
Imported by GForce Arms, Reno, NV

Warranty & Service: https://gforcearms.com/warranty
Email: info@gforcearms.com
Website: www.gforcearms.com